Turn Your Pickup or Trailer/Flatbed into a Dump Truck in Minutes!

Dump-Pro®

Shown with Hi-Sides™ and Tarp & Bungee options

LIGHTWEIGHT - SAVES FUEL!
EASY TO INSTALL & REMOVE !
JOBSITE TOUGH !

Dump-Pro utilizes a 4000 lb electric winch that operates off your truck's 12 volt DC battery. You'll always have power on hand ...and you can forget about messy and expensive hydraulic system maintenance.

NO DRILLING REQUIRED!

Installing or removing Dump-Pro® is a snap, thanks to dual lever side clamps and a single bolt "Quick Hitch" mechanism that works with all standard step bumpers.

Dump-Pro *is perfect for:*

- **Landscapers**
- **Contractors**
- **Farm & Ranch Uses**
- **Groundskeeping Operations**
- **Firewood Dealers**
- **Golf Courses**
- **Nurseries**
- **Roofers**
- **Parks & Rec Departments**
- **Construction Clean-Up**

UNLOADS IN A MINUTE!

Dump-Pro's® steel-reinforced poly dump body is lightweight ...half the weight of other systems means increased payload capacity*. The dump body never rusts, dents, or ever needs painting. Also mounts on your trailer or flatbed.

POWDER COATED TOUGH™

Shown with Hi-Sides™ volume enhancer option

AMAZING 60° Dumping Angle

Everything that goes in... comes out! Easily!

Pick-Up to Dump Truck in Minutes!™

Dump-Pro®

www.Dump-Pro.com

See it in ACTION at: www.dump-pro.com

SPECIFICATIONS

POWER

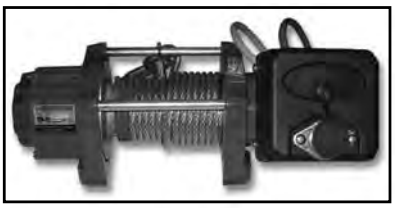

Our 4000 lb electrical winch puts an all metal gear train together with a heavy permanent magnet motor and a rugged planetary gear design. Braking is controlled by a mechanical and dynamic system that holds the full rated load.

DIMENSIONS

Length (Overall) . . . . . 97”
Width (Overall) . . . . . 61½”
Height (Installed) . . . . . 26½”

GENERAL DATA

MODELS . . . . . .Model FS2-12K . . (Full Size Model 2, 12 Volt, Kit)
. . . . . .Model FS2-12A. . . (Full Size Model 2, 12 Volt, Assembled)
Max. Capacity. . . . .3500 lbs Hauling; 3000 lbs Dumping
Volume . . . . . .Approx 2.15 Cu Yds or 4-5 Cu Yds with Hi-Sides™ option
Cycle Up Time @ Capacity . 45 Seconds
Installation . . . . . with Quick Change-Out™ Option
. . . . . (1-Bolt, No Drilling Required)
Energy Source . . . . . Existing DC (12 V)
System Weight . . . . . 386 lbs. (w/ Quick Change-Out™ Option +38 lbs.)

CONTROL

Every Dump-Pro® has a weather resistant remote control with 16’ lead for easy and safe up/down control.

FEATURES

- Much lighter than other dumpers = SAVES FUEL & more available payload capacity.*
- Installs and removes in just minutes. (with Quick Change-Out™ Option)
- Generous 3500 lb hauling and 3000 lb dumping capacity handles most needs.*
- Handy quick connect wiring using modular connector which makes change-out a snap.
- Mounting on a trailer and other options avaliable. • All parts painted or plated.
- Winch powered - No costly and heavy hydraulic system maintenance.
- Industrial grade steel-reinforced poly dump body • Water tight • No Rusting • No Denting • No Painting of dump body

MADE IN U.S.A.

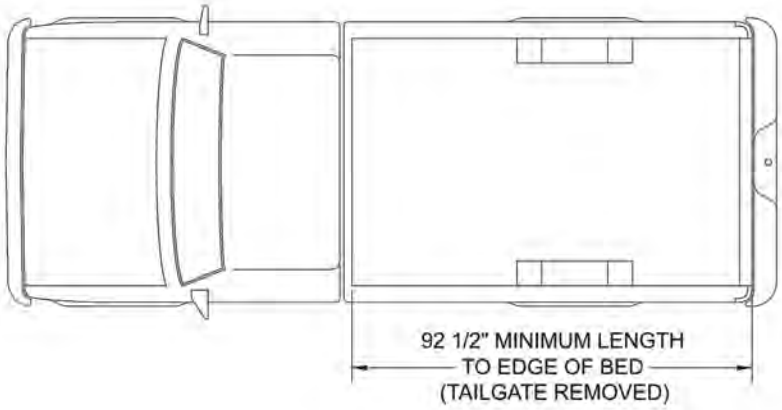

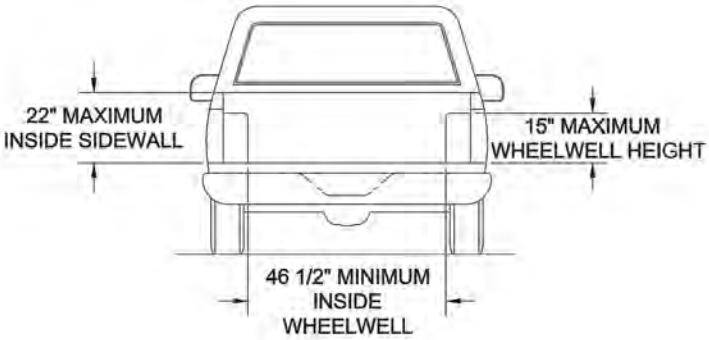

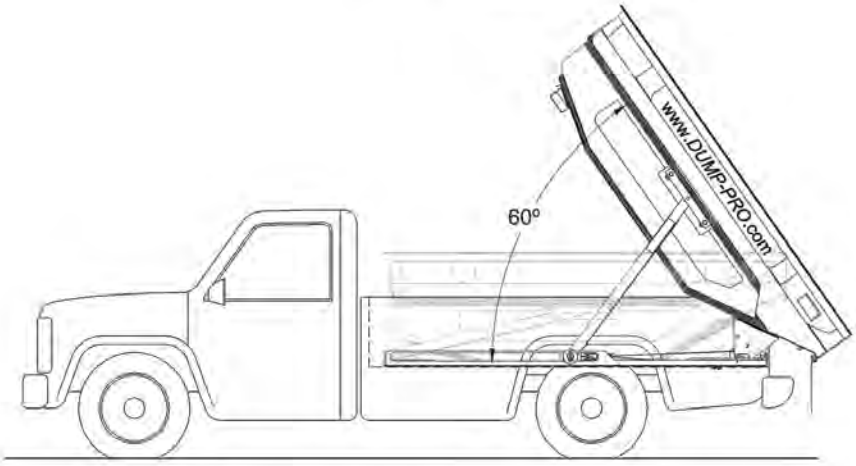

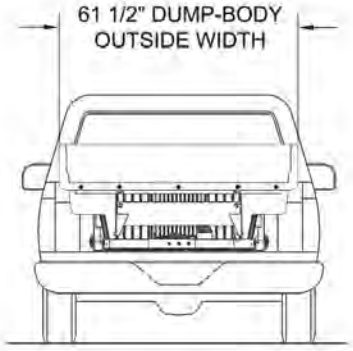

Pick-Up to Dump Truck in Minutes!™
Dump-Pro®
www.Dump-Pro.com

Manufactured & Distributed By:

U.S. Patent #5,447,361 and #7,114,784. Dump-Pro® is a Registered Trademark. Copyright© 2002-2010 by Dump-Pro, LLC. All Rights Reserved.
The manufacturer reserves the right under its product improvement policy to change construction, specifications or pricing without advanced notice.

***WARNING!** Do **NOT** overload the truck or trailer or exceed the weight carrying capacity of the truck or trailer on which Dump-Pro® has been installed. Capacity will vary with the system configuration and rated truck/trailer capacity. See operator’s manual and truck/trailer specifications for specific applications.